Manner of packing			REV'	ECN NO'	LOCAS'	DESCRIPTION	DATE	DESIGN
PE Bag	1.0K		A0			NEW	2012.02.13	譚立強

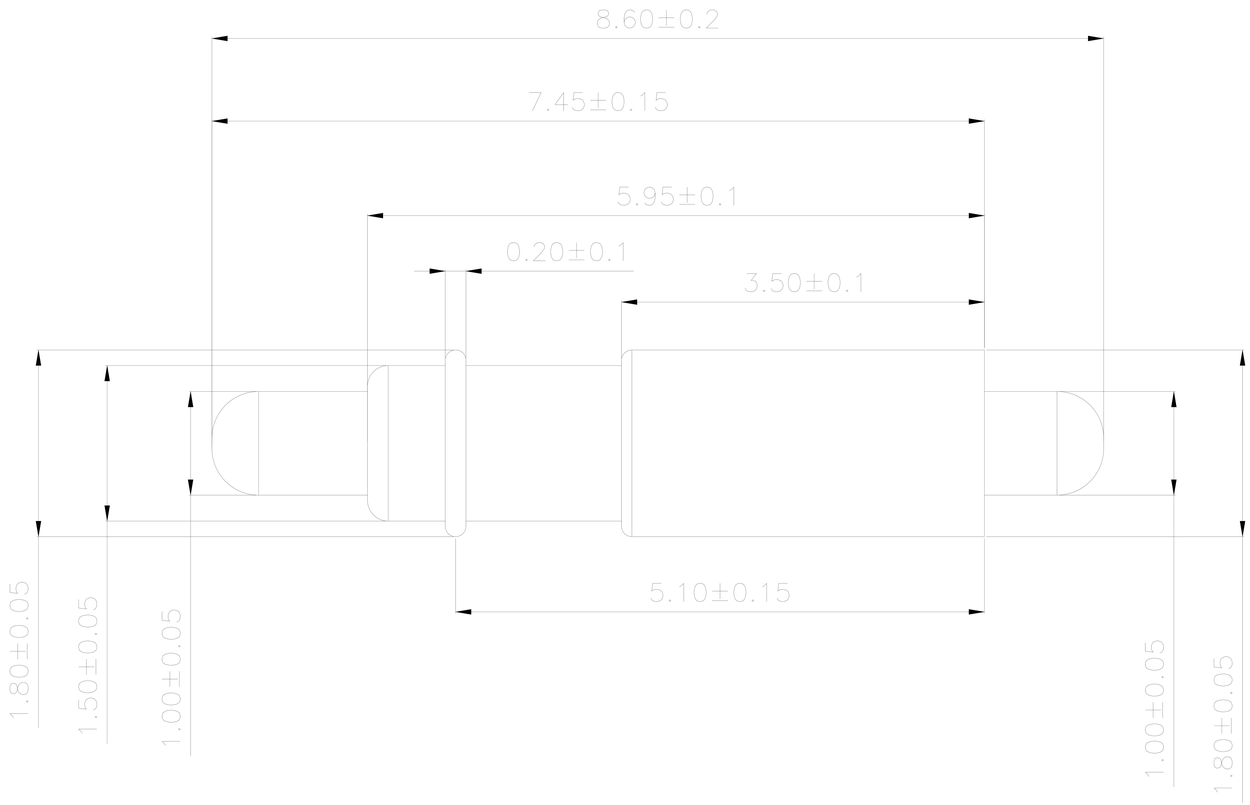

NOTE:

1.Material
.Plunger: Brass

2.Plating
.Contact surface:1u" minimum Au over 80~100u" Ni

3.Electrical
.Rated Current & Voltage: DC 12V; AC 1~1.65A,24H
.Contact Resistance: 25mΩ maximum

4.RoHS COMPLIED PROUCT.

5.Elasticity:Stroke 0mm:10gfStroke 0.25mm:50gf Stroke 2.30mm (or fully compressed):100-150gf

6.Life (Million):stroke range Max0.5~4mm,根据Pin的总类不一样Max. Stroke 10000次 Touch down后重量变化 0.5gf以内Creep变形最小化

7.Temperature: -40度~150度

8.Use:电子摄影：通电；手机：天线、接地、电池接触。

级别				品名	料号	单位	用量	材质
0	1	2	3					
0				1.80*8.60(2)双头弹 Ni50~90u" Au1u"	HY90-00090-002	PCS	1	
	1							
		2		1.20*2.45针头	HY60-00006-001	PCS	1	C3604
			3	1.20圆铜棒	HY50-00001-005	mm/pcs	2.95	C3604
	1			1.20*3.20针头 Ni50~90u" Au1u"	HY70-00093-001	PCS	1	
		2		1.20*3.20针头	HY60-00093-001	PCS	1	C3604
			3	1.20圆铜棒	HY50-00001-005	mm/pcs	3.70	C3604
	1			1.80*5.95针管 Ni50~90u" Au1u"	HY70-00090-003	PCS	1	
		2		1.80*5.95针管	HY60-00090-003	PCS	1	C3604
			3	1.80圆铜棒	HY50-00001-011	mm/pcs	6.45	C3604
	1			0.13*0.75*6.45*20N	HY51-00052-001	PCS	1	SUS304

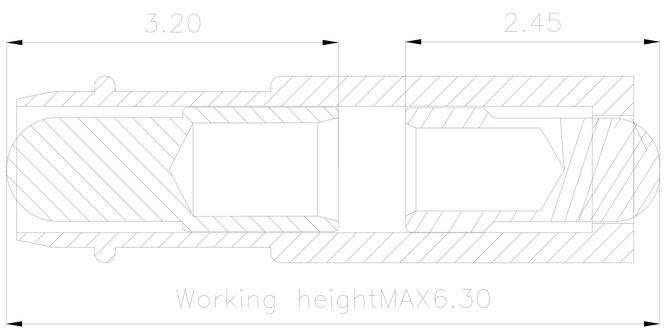

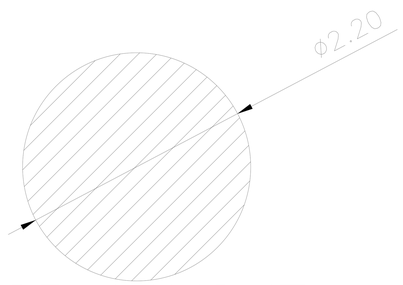

PCB LAYOUT

Layout Tolerance:±0.20mm

DIM	TOL	DIM	TOL
X.		X°	3°
X.X	±0.20	X.X°	
X.XX	±0.15	X.XX°	
X.XXX	±0.10	X.XXX°	

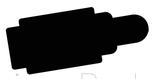

Spring Probe

深圳市泰科汉泽精密电子有限公司

Tyco Hanconn Precision Electronics

DRAW NO.		DATE	MATERIAL:Brass C3604	DRAW NAME:
DESIGN:	譚立強	2012.02.13	FINISH:Au1~3u",Ni,80~120u"	SEE TABLE
CHECK:			FILE:	
REVIEW:			P/N:SEE TABLE	
			REV. A0 SCALE N/A	UNIT: mm SHEET: 1/1